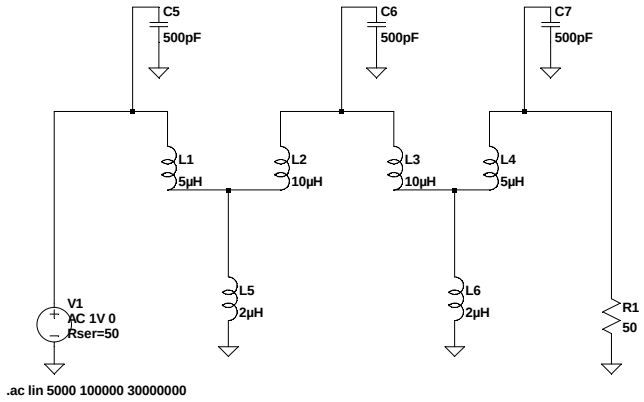
C5
500pF
C6
500pF
C7
500pF
L1
5µH
L2
10µH
L3
10µH
L4
5µH
L5
2µH
L6
2µH
V1
AC 1V 0
Rser=50
R1
50
.ac lin 5000 100000 30000000

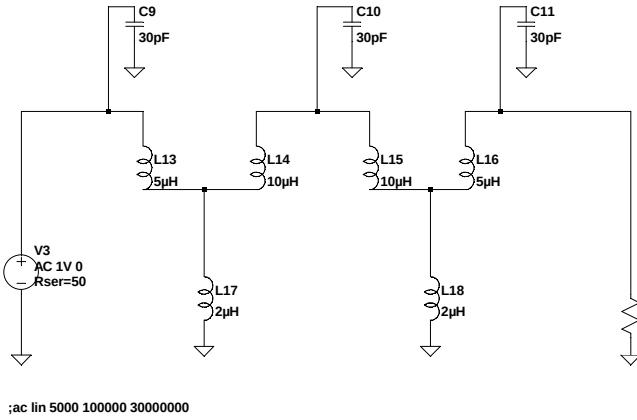
C9
30pF
C10
30pF
C11
30pF
L13
5µH
L14
10µH
L15
10µH
L16
5µH
L17
2µH
L18
2µH
V3
AC 1V 0
Rser=50
;ac lin 5000 100000 30000000

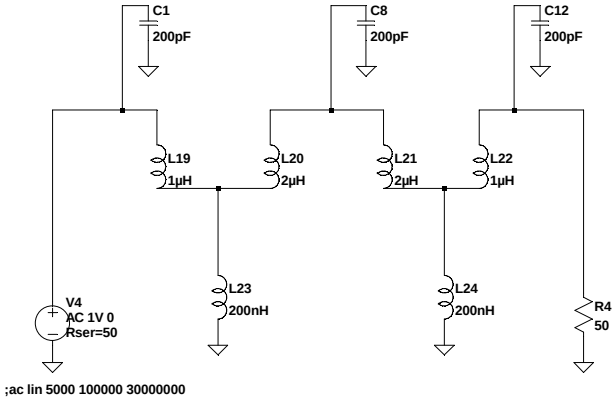
C1
200pF
C8
200pF
C12
200pF
L19
1µH
L20
2µH
L21
2µH
L22
1µH
L23
200nH
L24
200nH
V4
AC 1V 0
Rser=50
R4
50
;ac lin 5000 100000 30000000

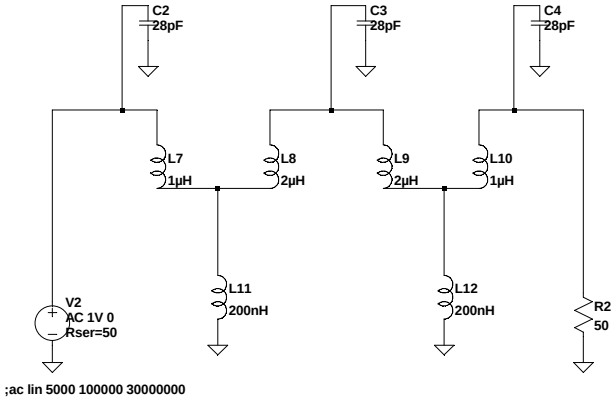
C2
28pF
C3
28pF
C4
28pF
L7
1µH
L8
2µH
L9
2µH
L10
1µH
L11
200nH
L12
200nH
V2
AC 1V 0
Rser=50
R2
50
;ac lin 5000 100000 30000000